Synchronous Motor
SSM-12P

제품사진 / Product Images

DIMENSION

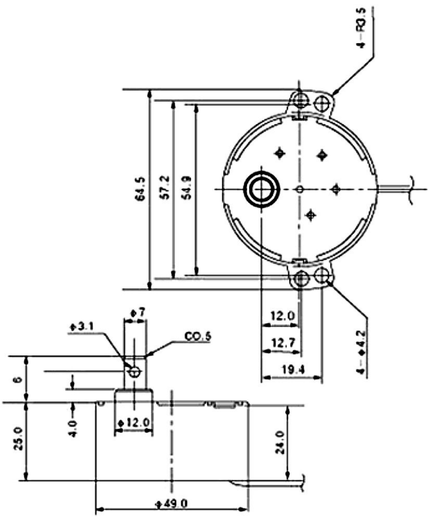

SPECIFICATION

ITEM	SPECIFICATION							
RATED VOLTAGE	AC24, 100, 110, 120, 220-240V							
FREQUENCY	50, 60, 50/60Hz							
STANDARD SPEED	50Hz	3.3	4.1	5	6.8	12.5	30	100
	60Hz	4	5	6	8.1	15	36	120
STALLING TORQUE	8.0 6.0 5.0 3.0 1.5 0.5 0.1 kgf-Cm Min							
INPUT POWER	5.0W MAX							
TERMINAL SHAPE	LEAD WIRE TYPE							
MATERIAL OF SHAFT	METAL TYPE							
APPLICATION	MICROWAVE OVEN FAN, COPY MACHINE AIR-CONDITIONER, LAMINATOR, Etc							